PARTS LIST				
ITEM	QTY	PART NUMBER	MATERIAL	VOLUME
1	1	Base	Steel	844036.989 mm^3
2	1	Central	Steel	3814159.265 mm^3
3	1	cantiliever	Steel, Cast	1787123.890 mm^3

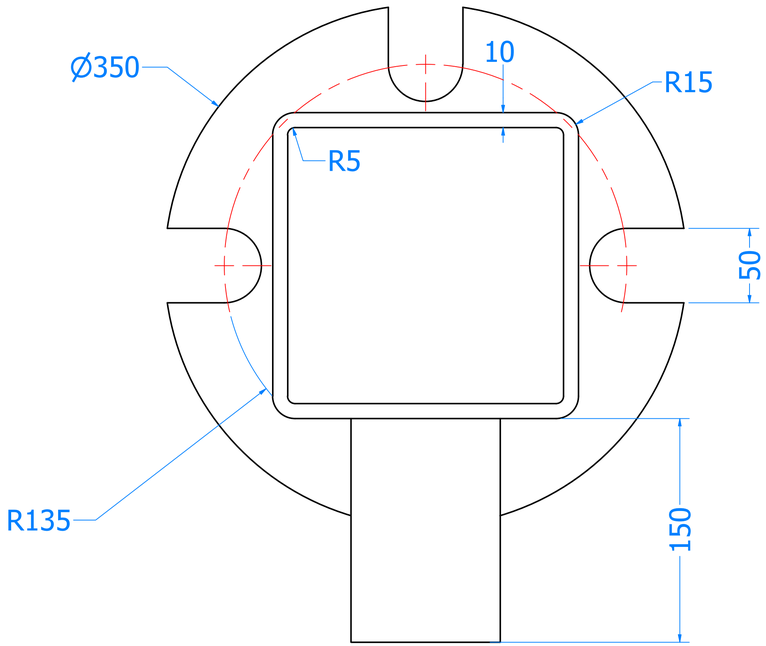

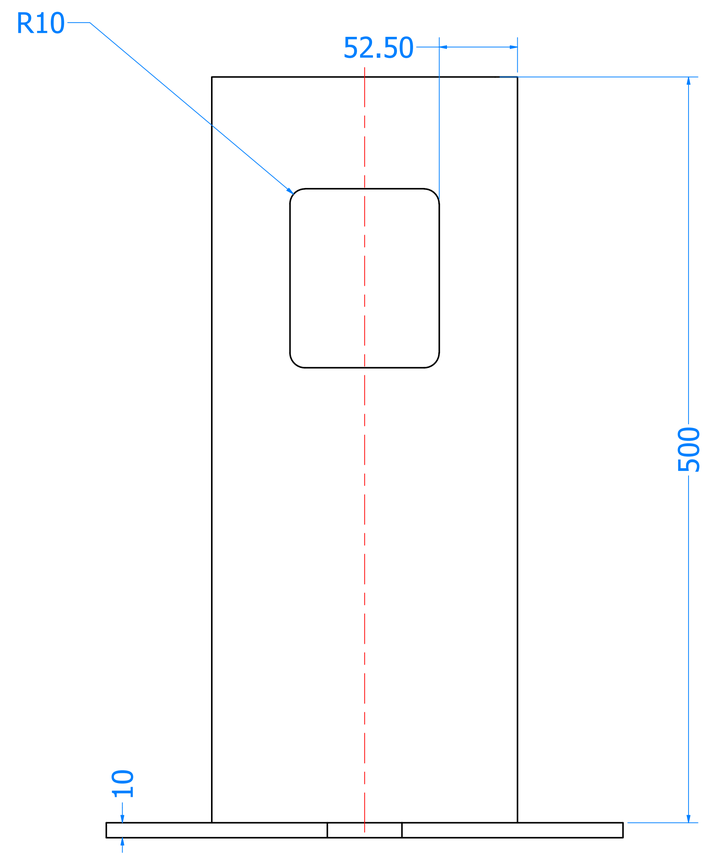

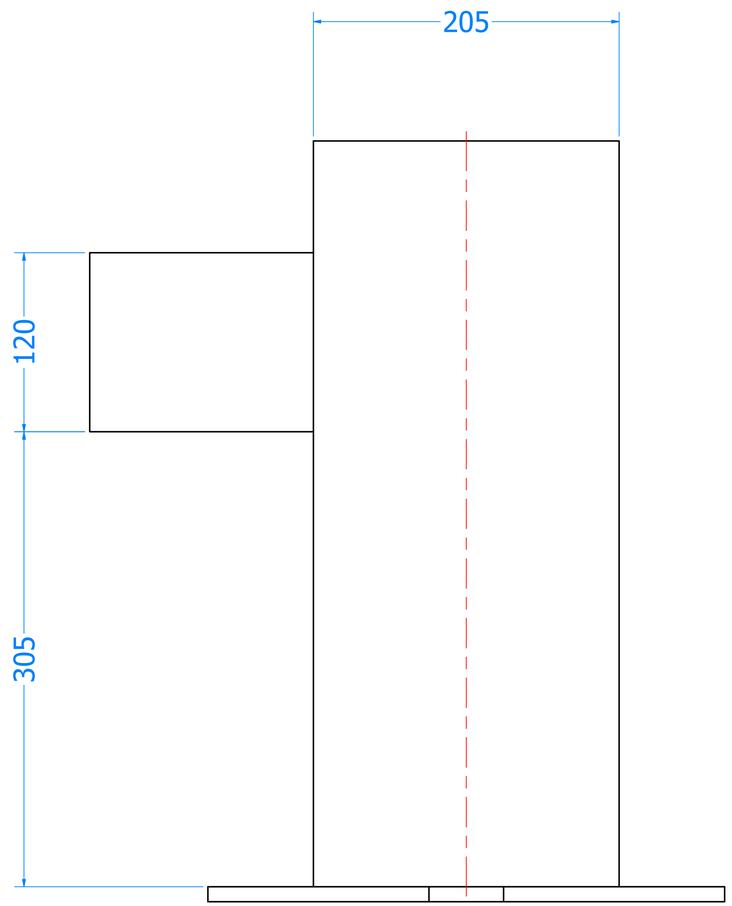

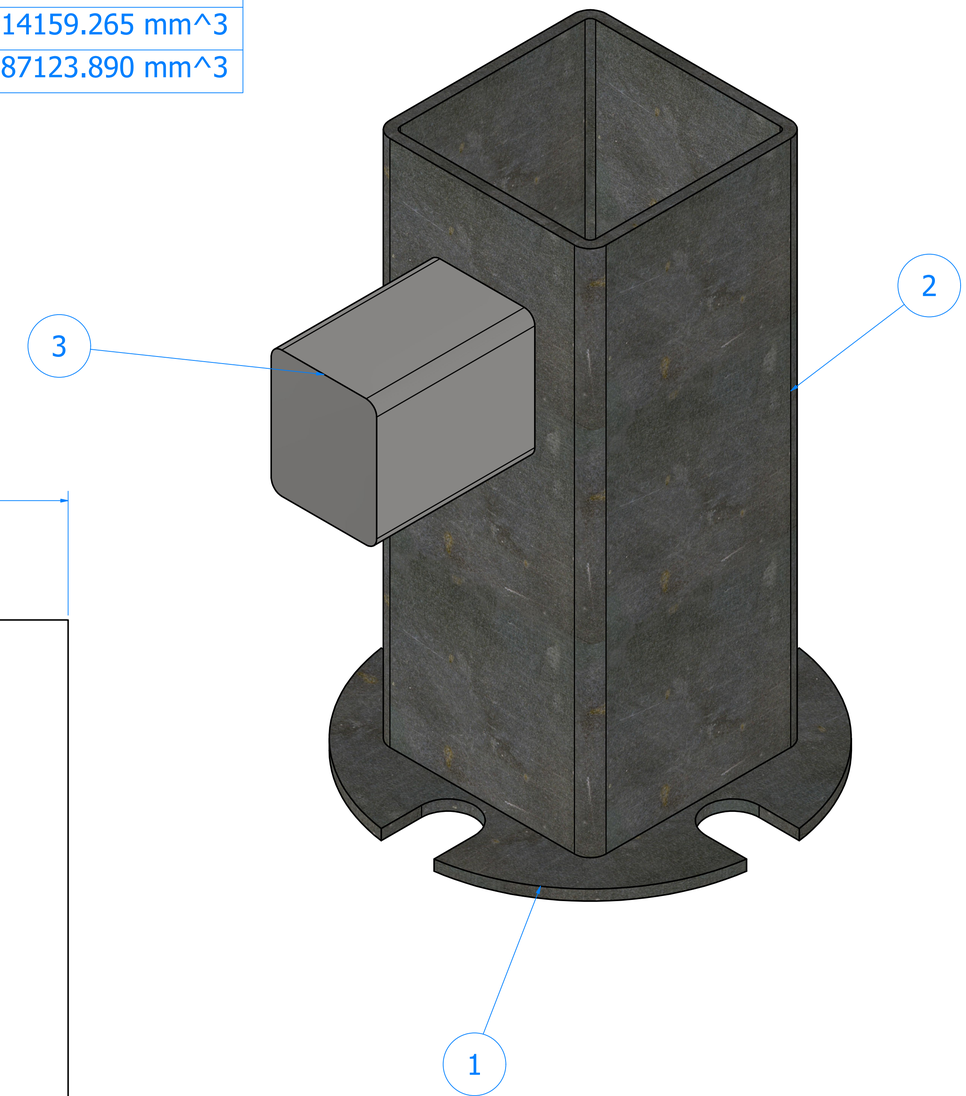

D
mm

Author: bless
Date: 2025-04-01
Assignment 5.iam
Material: Welded Aluminum-6061
Scale: 1/2
1 / 2

CONESTOGA
Connect Life and Learning

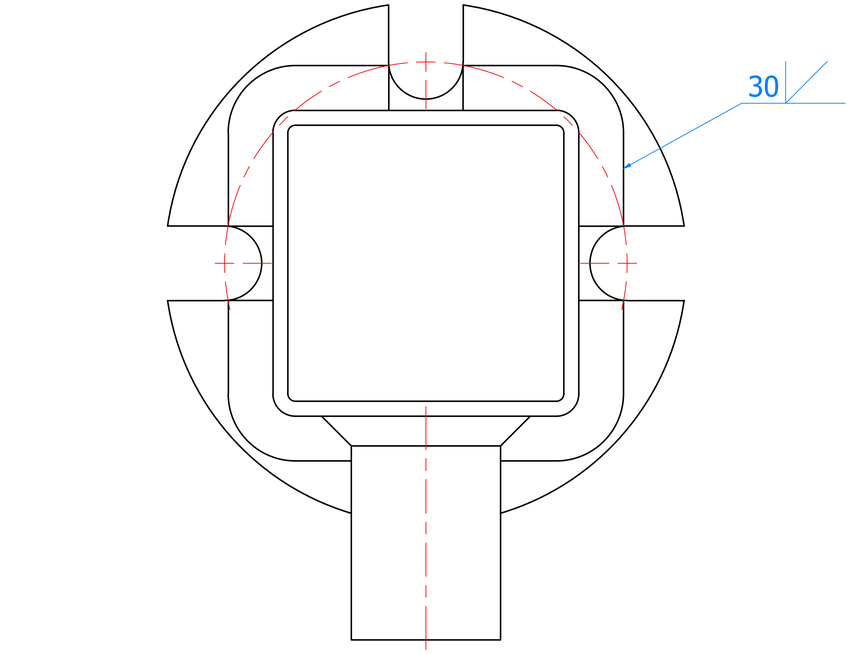

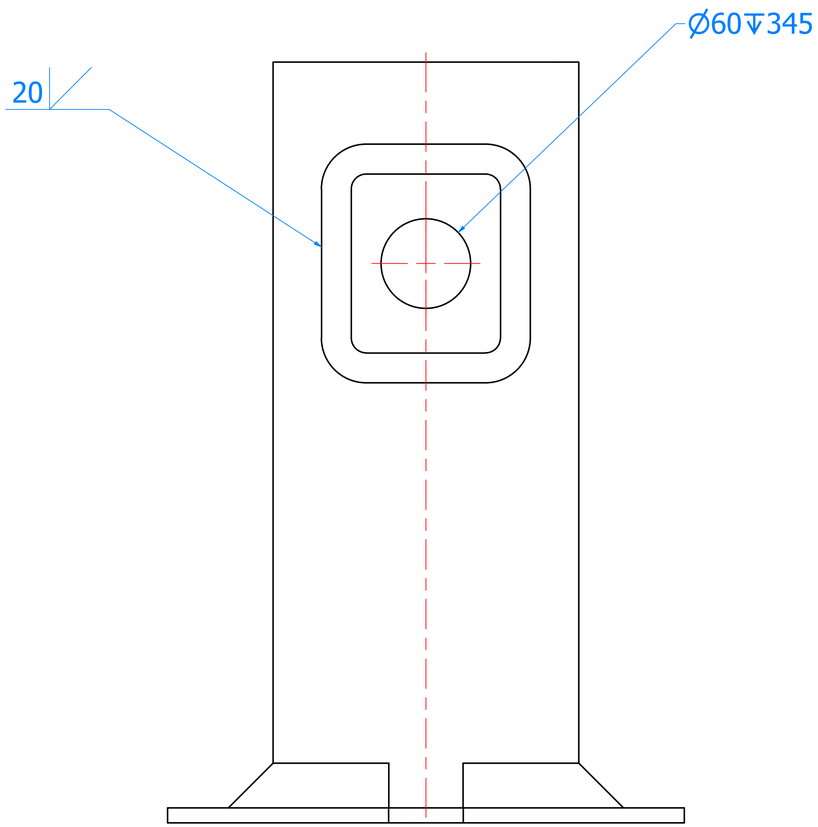

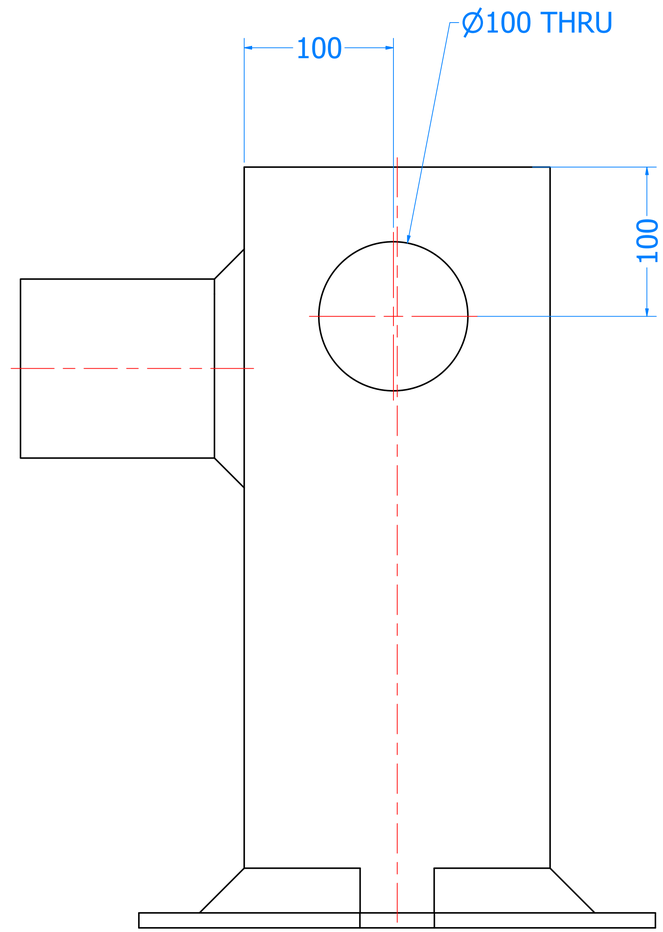

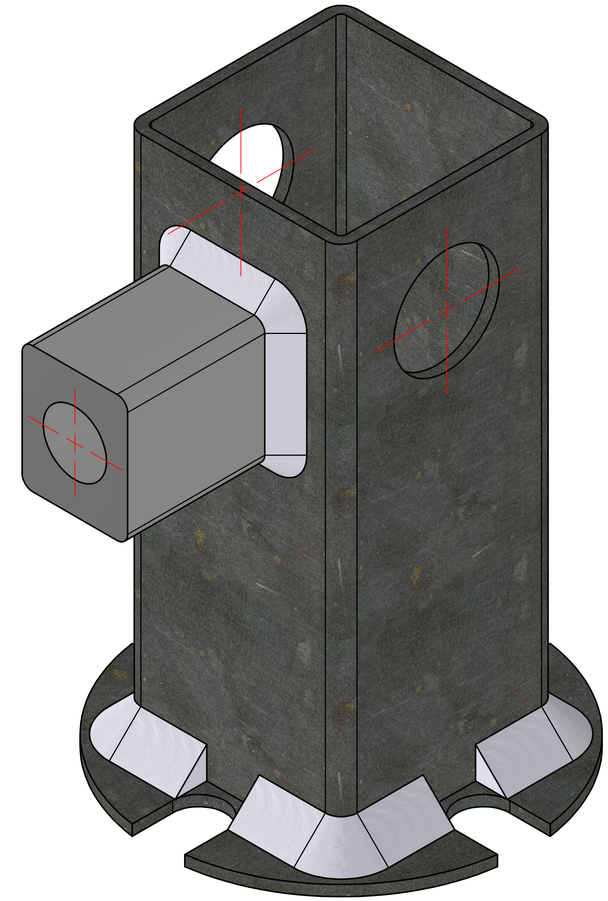

D mm	Author: bless Date: 2025-04-01 Assignment 5.iam Material: Welded Aluminum-6061 Scale: 1/2 2 / 2

CONESTOGA
Connect Life and Learning